THE “RECEIVER” BANDWIDTH.
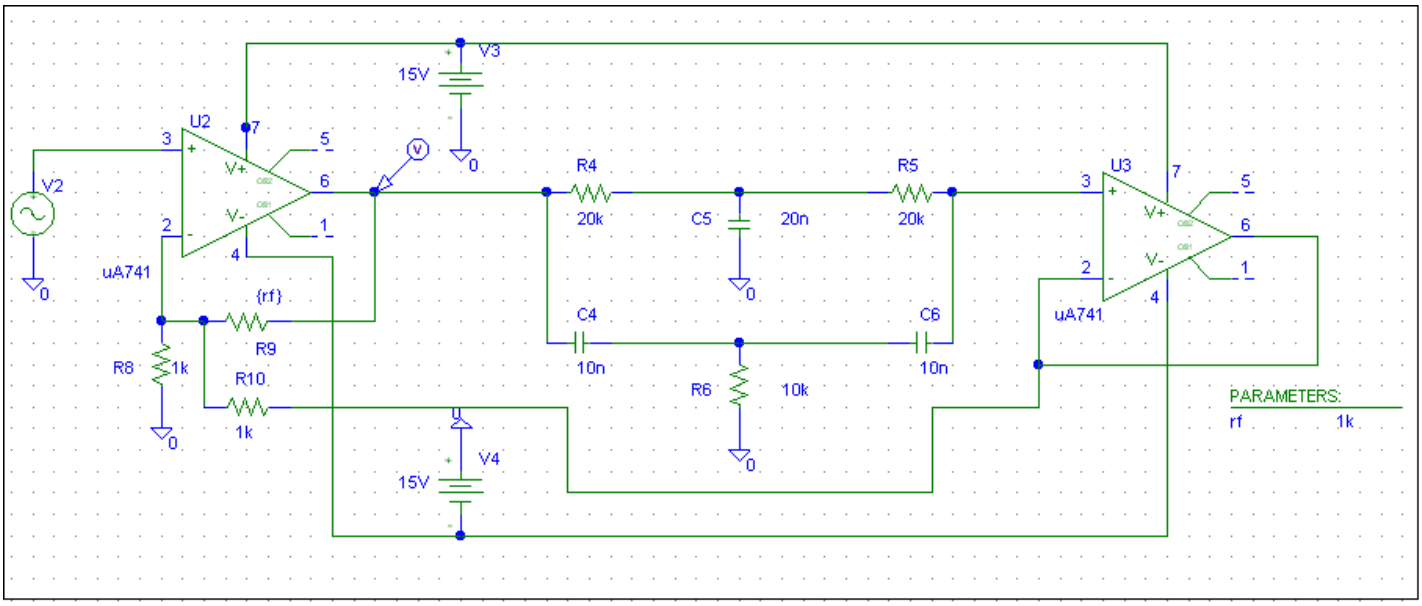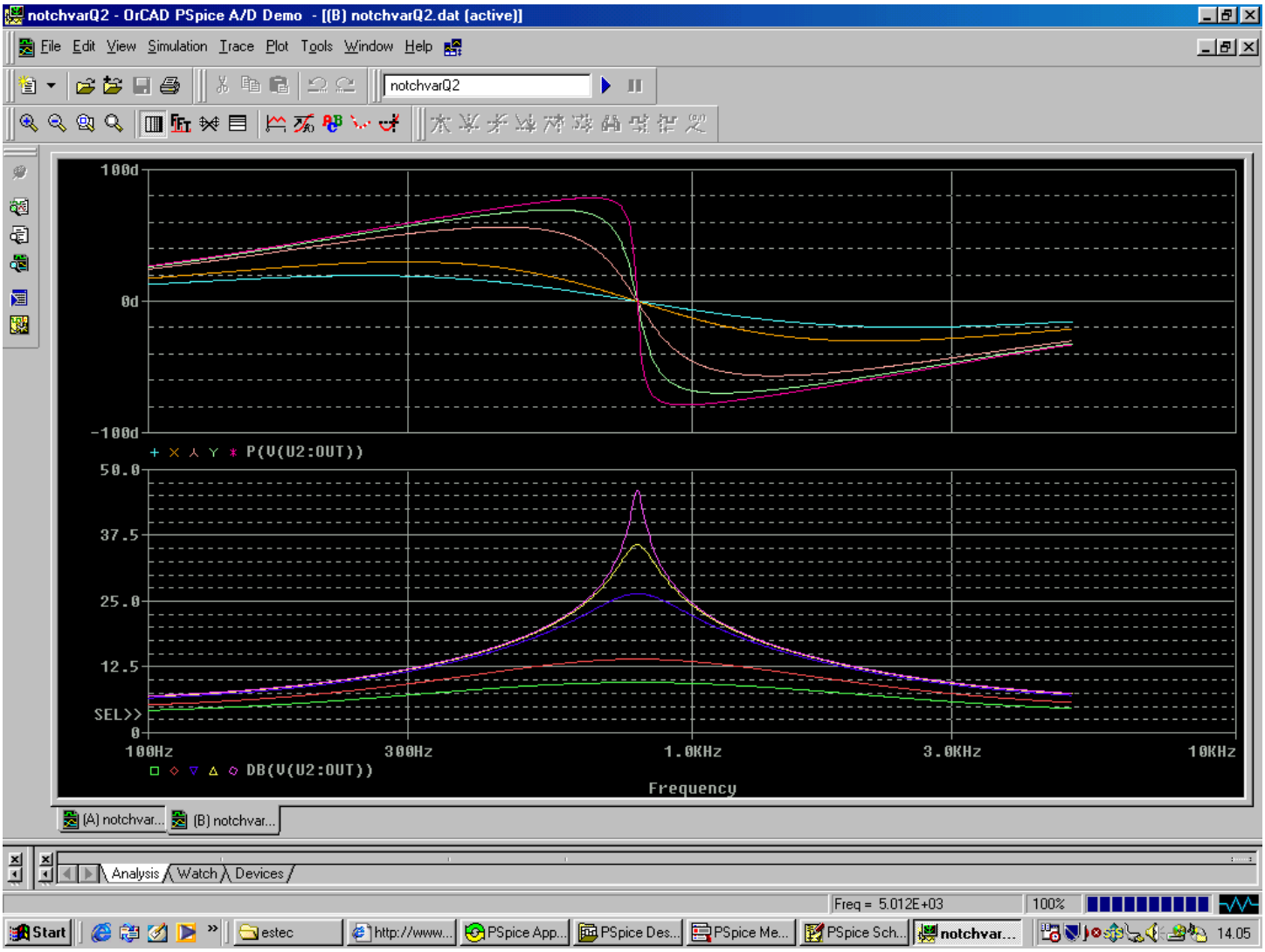
Scope connected to the output of U2.